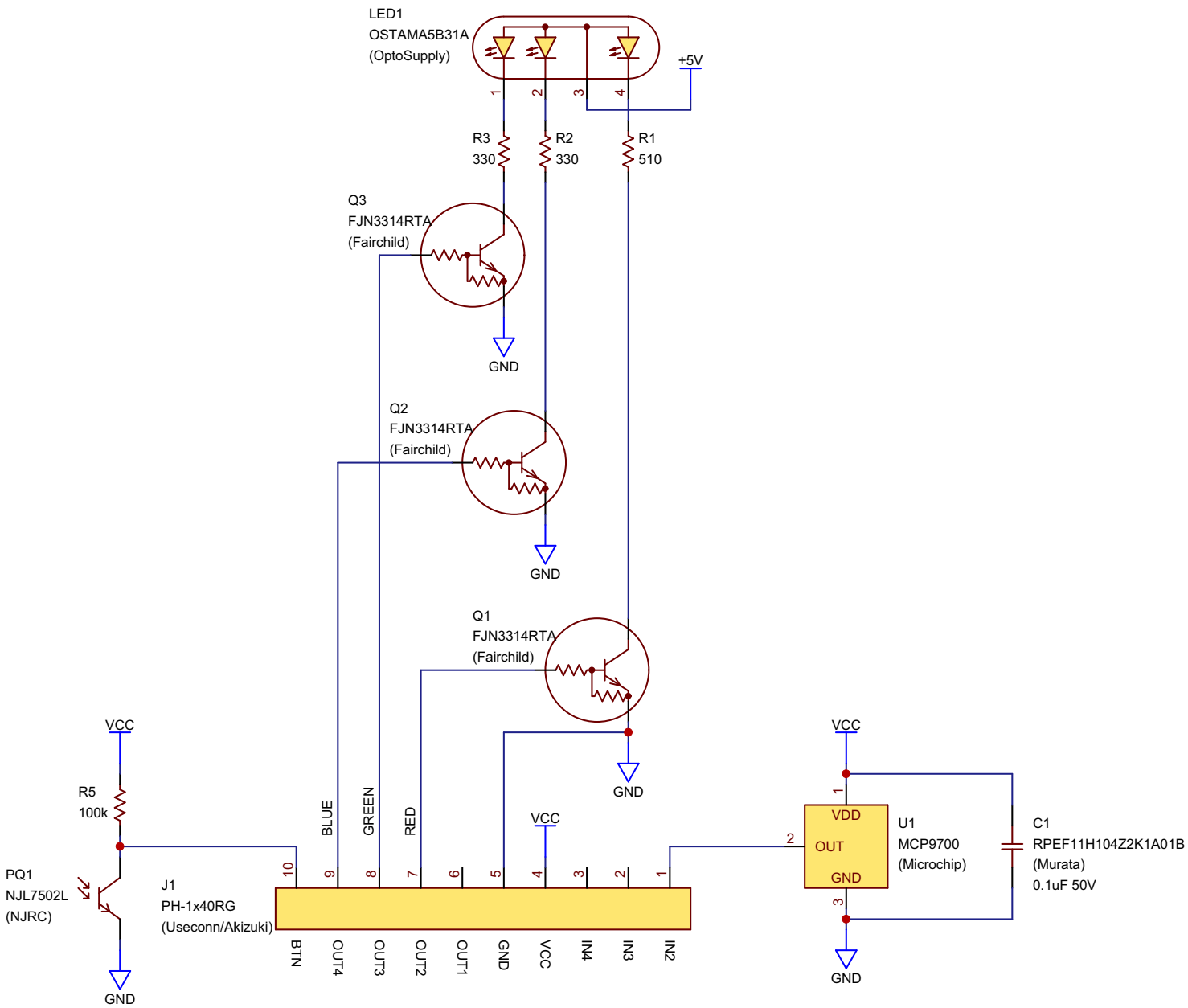
LED1
OSTAMA5B31A
(OptoSupply)
+5V
1
2
3
4
R3
330
R2
330
R1
510
Q3
FJN3314RTA
(Fairchild)
GND
Q2
FJN3314RTA
(Fairchild)
GND
Q1
FJN3314RTA
(Fairchild)
GND
VCC
R5
100k
PQ1
NJL7502L
(NJRC)
GND
J1
PH-1x40RG
(Useconn/Akizuki)
BLUE
GREEN
RED
VCC
10
9
8
7
6
5
4
3
2
1
BTN
OUT4
OUT3
OUT2
OUT1
GND
VCC
IN4
IN3
IN2
VCC
VDD
OUT
GND
U1
MCP9700
(Microchip)
C1
RPEF11H104Z2K1A01B
(Murata)
0.1uF 50V
GND